LAOWA 10mm T2.1 Cine

使用手册
Instruction Manual

微信公众账号　FACEBOOK

安徽长庚光学科技有限公司
www.laowalens.com

服务热线：400-066-1316
Email: sales@laowalens.com
电话Tel:(+86) 551-69107990
地址：合肥市庐阳区天水路与太和路交口庐阳中科大校友创新园5号楼
Add：Building 5, USTC Alumni Innovation Park, Crossing of Tianshui and Taihe Road, Luyang District, Hefei City, Anhui Province, China

LAOWA 老蛙

本公司保留更改产品设计与规格的权利，届时恕不另行通知；
本公司保留对此《使用说明》的最终解释权。
Please note we reserve the right to change our product's design and specifications at any time without notice and to the final interpretation of the *Instruction Manual.*

LAOWA 老蛙

## 前言

真诚地感谢您选购 LAOWA 10mm T2.1 Cine广角镜头。此镜头是MFT系统下的超广角镜头，采用迷你化设计，轻便小巧。为了让您充分理解本产品的使用方法和注意事项，请您在使用前仔细阅读本说明书。




⚠ *为了操作上的安全，使用本产品前请务必详细阅读使用手册与注意事项，并将手册放在需要时容易取得的地方。如遇到不能解决的问题请通过售后电话获取技术支持。*

## 主要特色

- 镜头采取迷你化设计，大小仅有φ56mm*47mm，重量150g，搭配在M43画幅机身上使用，体积小巧，轻便携带。
- 此款镜头的机械结构全部采用金属材质，有效了保障了镜头的组装精度，大幅提升了镜头的耐用性。
- 内部有7组11片镜片，包含3枚异常分散玻璃和2枚非球面镜片的结构带来的高素质成像。



## 注意事项

### ⚠ 安全注意事项

- 切勿自行拆解、修改或改装。当产品由于外力原因破损，切勿触碰外露部分或破损边缘处。
- 切勿放置于直射阳光下、封闭车辆中或其余高温处，否则过高的温度会使镜片和其他部件产生伸缩变形。
- 不使用镜头时，请将镜头前盖盖上或置于没有阳光照射处。凸透镜反射出的光线可能会聚集在附近物体上，导致发生火灾。
- 在逆光拍摄时，切勿将太阳置于画面中心，应该使太阳充分偏离画角，否则阳光会在相机内部聚集并导致火灾或灼伤眼睛。
- 在使用相机内置闪光灯拍摄时，由于镜头本身会遮挡光线而产生渐晕，因此建议您使用外设闪光灯拍摄。

## 注意事项

### 长期使用保养注意事项

- 避免触摸镜头表面，应用专用镜头布或气吹去除镜头表面的尘埃，不使用镜头时，应将镜头盖盖上。
- 使用镜头纸或镜头布清洁时，以螺旋的方式从中间向外擦拭镜头上的污垢以及指印。
- 镜头从寒冷的环境突然转移至温暖的环境时，镜头的外部以及内部镜片将会凝结水雾，所以在转移时应采取防潮保护措施。



## 各部件名称

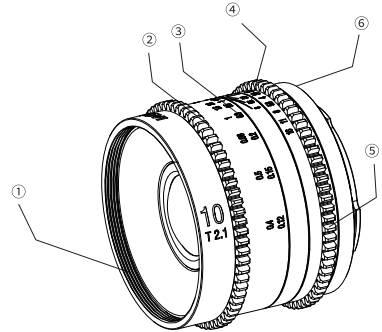


①滤镜（镜头盖）安装螺纹
②对焦环
③距离（倍率）刻度
④景深指示刻度
⑤光圈环
⑥镜头安装标记

## 镜头安装

- 取下镜头后盖。将镜头卡口上的安装标记⑥对准相机座圈上的对应标记，随后将镜头插入机身座圈，根据所购买卡口的安装方向旋转镜头，直至咔嚓声锁紧镜头。安装时请不要用力过猛，以免导致卡口损伤。

## 镜头拆卸

- 关机后按住相机上的镜头释放按钮，依照所购买卡口的安装方向反向旋转镜头，随后将镜头从座圈中拔出。
- 装上镜头后，请尝试旋转镜头确认是否已将其固定在相机上。





## 对焦

- 此款镜头是全手动对焦镜头，合焦时，缓慢旋转对焦环②，直至合焦。
- 不要过猛过快地旋转对焦环，避免用力过度损坏对焦环部件。
- 镜头上的距离刻度③与景深刻度④是出于指导目的。实际焦点与最深可能同刻度标记稍有不同。
- 如需要非常精确的对焦，请在固定好相机位置的情况下使用最大光圈对焦，对焦完成后再旋至所需要的光圈值。
  为了对焦的方便性，请开启相机内的峰值对焦功能(视所使用相机功能而定)。

## 光圈使用

- 光圈在镜头上调节，根据拍摄环境和与所需要的景深，转动光圈环⑤来选择对应的光圈。
- 由于此镜头无CPU数据，无法记录光圈参数。





## 对焦方法

对焦方法一：
放大倍率预先确定后再进行对焦
① 预先确定放大倍率，随后转动对焦环至所需的放大倍率刻度。
② 通过取景器或开启Live View（实时取景）功能观察画面，并前 后平移相机进行粗略对焦直至确定合适的焦距。
③ 转动对焦环对物体进行精确对焦。

对焦方法二：
先构定拍摄画面 在通过取景器或开启Live View（实时取景）功能观察画面的同 时，转动对焦环，构定拍摄画面后，进行方法一的②、③步骤。

- *在进行高放大倍率拍摄时，镜头的工作距离非常短，容易碰到拍摄物体，请小心拍摄。*
- *放大倍率是指记录在传感器或胶片上的图像尺寸大小与拍摄物体的实际尺寸大小之间的比 例关系。*

## 规格表

| MFT 10mm T2.1 Cine | |
|---|---|
| 镜头型号 | MFT 10mm T2.1 Cine |
| 画幅 | M43 |
| 焦点距离 | 10mm |
| T-stop范围 | 2.1-22 |
| 视场角 | 96° |
| 镜头结构 | 7组11片 (3枚异常分散玻璃，2枚非球面) |
| 光阑叶片 | 5片 |
| 最近摄影距离 (物像距离) | 12cm |
| 最大放大倍率 | 0.15倍 |
| 合焦驱动方式 | 手动 (MF) |
| 滤镜尺寸 | ø49mm |
| 镜头尺寸 | ø56mm*47mm |
| 重量 | 150g |
| 卡口 | M43 |



## 镜片结构

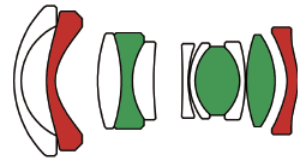

异常分散玻璃
非球面玻璃

新创意 • 新乐趣

NEW IDEA. NEW FUN.

LAOWA 老蛙

## PREFACE

Thank you very much for purchasing LAOWA 10mm T2.1 Cine wide-angle lens. This ultra-wide-angle lens is designed for Micro Four Thirds system. This lens is compact and light in weight. Read this operation manual carefully to familiarize yourself with its contents and ensure that you can operate the product properly.




⚠ *Keep the Instruction Manual in a safe place where it can easily be referenced whenever required. If you are still unable to solve the problem by reading the manual, please contact our after-sales service for further technical support.*

## FEATURES

- The lens is extremely compact and lightweight. It measures φ 56mm*47mm in size and weighs only around 150g. Using it with MFT cameras, the whole set is compact and easy to carry.
- The all-metal structure ensures the lens' assembly accuracy and reliability.
- The lens is constructed by 11 optical elements in 7 groups with 2 aspherical lenses and 3 ED lenses to deliver excellent sharpness.



## PRECAUTIONS

### ⚠ Safety Precautions

- Do not disassemble, modify the lens by yourself. Do not touch the internal parts that become exposed as the result of external force.
- Do not leave the lens where it will be exposed to high temperatures, such as in direct sunlight and an enclosed vehicle. Excessive heat may deform the glass elements and other parts of the lens.
- Whether it is attached to the camera or not, do not leave the lens under the sun without the lens cap attached. This is to prevent the lens from concentrating the sun's rays, which could cause a fire.
- Do not place the sun in the frame center when shooting with backlight. Doing so might cause a fire or harm your eyes.
- The camera's built-in flash will cause barrel shadow if used with this lens. For best results, please only use an external flash unit.

## PRECAUTIONS

### Maintenance Precautions

- Do not touch the surface of the lens directly. Brush off any dust with a blower. Wipe the surface with a cleaning cloth or a lens tissue.
- Try a circular motion from the center outward to remove oil, fingerprints and grime on the lens surface.
- If your lens is brought directly from a cold place to a warm place, condensation may appear on the lens. To avoid this, be sure to take some action to protect the lens.



## NOMENCLATURE

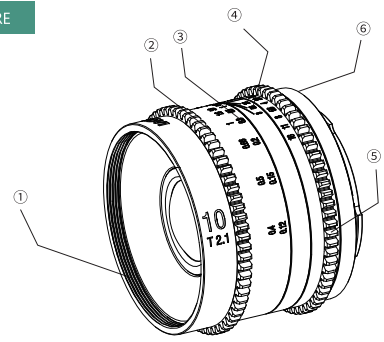


①Filter (lens cap) mounting thread ③Distance (magnification) scale ⑤Aperture ring
②Focus ring ④Depth of field scale ⑥Lens mounting index

## To attach the Lens

- Remove the rear lens cap. Align the mounting index⑥ on the lens bayonet with the mounting index on the camera, and place the lens on the camera mount, then rotate the lens according to the proper direction of the mount type until it locks. Do not use excessive force during installation to avoid damage to the bayonet.

## To remove the lens

- Turn the camera off. While pressing and holding the lens release button on the camera, rotate the lens in the reverse direction for attaching the lens until it stops, then detach the lens.
- After attaching the lens, please try to rotate the lens to make sure it mounted onto the camera properly.





## Focusing

- This is a fully manual lens. Rotate the focusing ring② slowly to get focus.
- Turn the focus ring slowly and gently to prevent the focus mechanism from damage.
- The distance scale③ and depth of field scale④ are for instructional purposes. Actual focus and DOF may slightly differ from those scale indications.
- To get precise focus, it is recommended to focus wide open when the camera position is fixed. Get focus first, then set the desired aperture by turning the aperture ring.
  Turn on the focus peaking on the camera to help focusing. (Note that the function depends on camera models.)

## Setting the Aperture

- Aperture is set through the aperture ring on the lens. According to the shooting situation and desired depth of field, rotate the aperture ring⑤ on the lens to the corresponding aperture.
- Since the lens has no CPU data, the aperture value can't be recorded.





## Focusing Tips

Method 1 Magnification Priority
①Set the magnification first, and then turn the focus ring to the desired magnification mark on the lens.
②Check the frame by viewfinder or [Live View] on the camera and try to get focus by moving the camera back and forth until obtaining the proper focal length.
③Rotate the focus ring to achieve precise focus.

Method 2 Framing Priority
Set the frame first. Turn the focus ring while you are checking the image through viewfinder or [ Live View] on the camera, and then follow steps 2, 3 as the method 1 above.

- *For high magnification close-ups, because of the extremely short working distance, please be careful not to touch the subject.*
- *Magnification refers to the proportional relationship between the size of an image recorded on a sensor or film and the actual size of the subject.*

## SPECIFICATIONS

| MFT 10mm T2.1 Cine | |
|---|---|
| Lens No. | MFT 10mm T2.1 Cine |
| Format | MFT |
| Focal Distance | 10mm |
| T-stop Range | 2.1-22 |
| Angle of View | 96° |
| Lens Construction | 11 elements/ 7 groups ( ED glass x3, aspherical glass x2) |
| Aperture Blades | 5 |
| Min. Shooting Distance | 12cm |
| Max. Magnification | 0.15x |
| Focusing | MF |
| Filter Thread | Φ49mm |
| Dimensions | Φ56mm*47mm |
| Weight | 150g |
| Mounts | MFT |



## LENS CONSTRUCTION

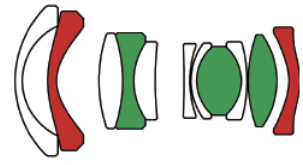

Extra-low Dispersion Glass
Aspherical Glass